CURRENT TRANSFORMER

Model 360

Window Diameter 6.31"

APPLICATION:
Metering.

FREQUENCY:
50–400 Hz.

INSULATION LEVEL:
0.6 kV, BIL 10 kV full wave.

REGULATORY AGENCY APPROVALS

E93779 LR89403

Manufactured to meet the requirements of ANSI/IEEE C57.13.
Classified by U.L. in accordance with IEC 44–1.

Approved for revenue metering by Industry Canada. AE–0654(*)

CONTINUOUS THERMAL CURRENT RATING FACTOR:
1.33 at 30°C amb., 1.0 at 55°C amb.

- Secondary terminals are No. 8–32 brass studs with one flatwasher, lockwasher and regular nut.
- Approximate weight 6 lbs.

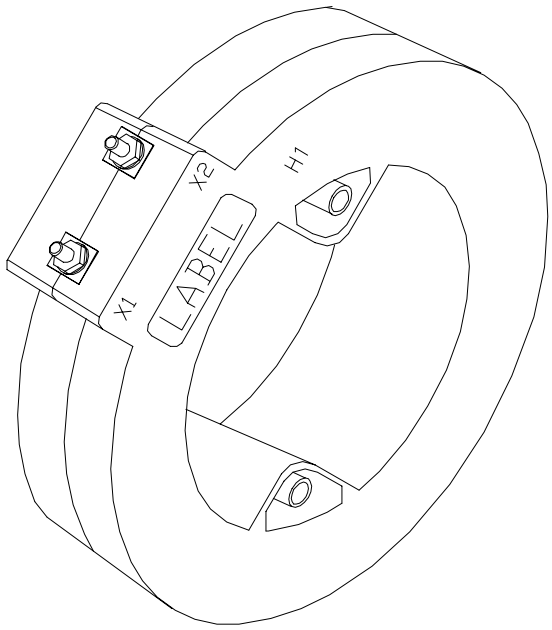

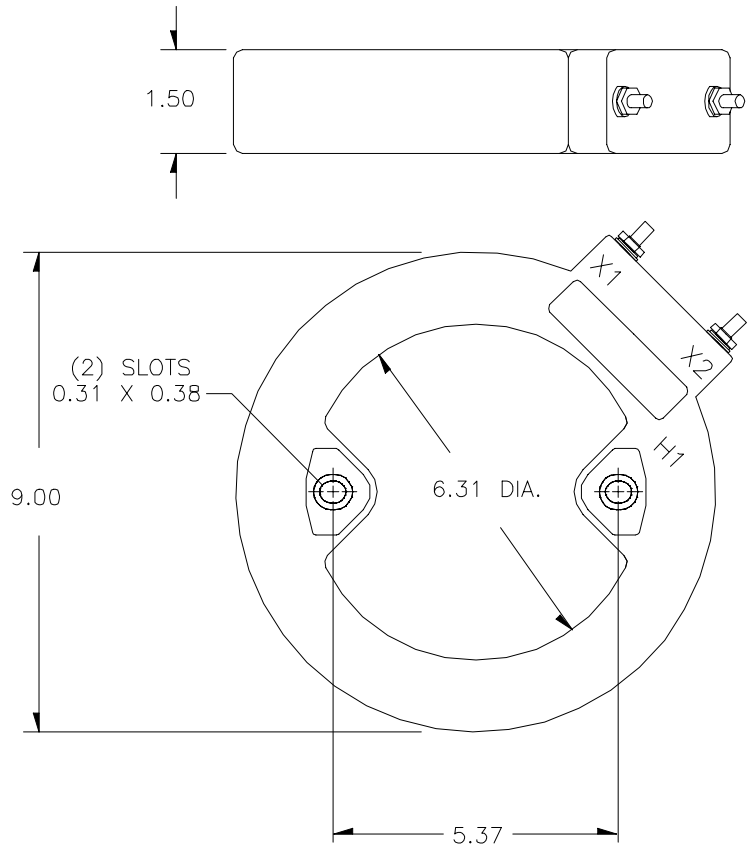

EXCITATION CURVE

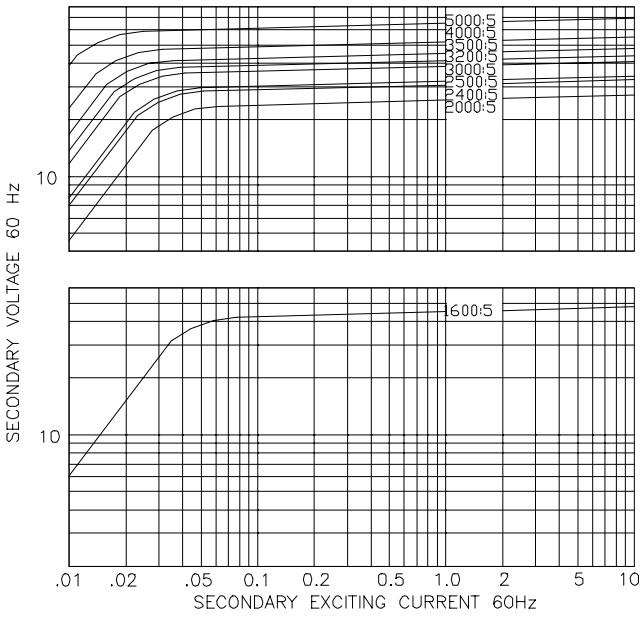

CATALOG NUMBER	CURRENT RATIO	VA FOR 1% CLASS	ANSI METERING CLASS AT 60 Hz					SECONDARY WINDING RESISTANCE (OHMS @ 75 °C)
			B0.1	B0.2	B0.5	B0.9	B1.8	
360–162	1600:5	55	0.3	0.3	0.3	0.3	0.6	0.345
360–202	2000:5	60	0.3	0.3	0.3	0.3	0.6	0.334
360–242	2400:5 *	60	0.3	0.3	0.3	0.3	0.3	0.413
360–252	2500:5 *	65	0.3	0.3	0.3	0.3	0.3	0.430
360–302	3000:5 *	80	0.3	0.3	0.3	0.3	0.3	0.516
360–322	3200:5 *	90	0.3	0.3	0.3	0.3	0.3	0.550
360–352	3500:5 *	100	0.3	0.3	0.3	0.3	0.3	0.602
360–402	4000:5 *	110	0.3	0.3	0.3	0.3	0.3	0.769
360–502	5000:5 *	120	0.3	0.3	0.3	0.3	0.3	1.190