GE Transmission, Distribution & Industrial Systems

Secondary Surge Arresters

GENERAL SAFETY INSTRUCTIONS

WARNING: *ARRESTER CAN FAIL VIOLENTLY AND CAUSE INJURY AND PROPERTY DAMAGE WHEN APPLIED AT VOLTAGES GREATER THAN 120V. FUSING IS RECOMMENDED ABOVE 120V.*

In the unlikely event of an electrical failure, when applied at voltages greater than 120V, this arrester can rupture violently at available 60 Hz fault current levels as low as 1000 A or less. Electrical failures may result from sustained overvoltages or excessive current surges. The failure mode can result in an electrical arc that will propel the cover and internal components within the arrester distances up to 100 feet from the device.

On 120 V systems, no field failures have been reported and the failure modes that could result in violent failure are not expected to occur. On higher voltage systems, failures are very unlikely based upon a total reported field failure rate of .01% since 1983. However, violent failures have been reported and therefore fusing is recommended to minimize risk of injury and property damage unless the arrester is located in an area where a violent failure will be safely contained without hazard to personnel or adjacent property.

FOR APPLICATION AT VOLTAGES ABOVE 120 V SEE SECTION ON FUSE SELECTION GUIDELINES.

CAUTION: *THE EQUIPMENT COVERED BY THESE INSTRUCTIONS SHOULD BE INSTALLED AND SERVICED ONLY BY COMPETENT PERSONNEL FAMILIAR WITH GOOD SAFETY PRACTICES. THIS INSTRUCTION IS WRITTEN FOR SUCH PERSONNEL AND IS NOT INTENDED AS A SUBSTITUTE FOR ADEQUATE TRAINING AND EXPERIENCE IN SAFE PROCEDURES FOR THIS TYPE OF EQUIPMENT.*

NOTE: *AN ARRESTER SHOULD BE INSTALLED IN ACCORDANCE WITH ALL APPLICABLE LOCAL AND NATIONAL ELECTRICAL CODES.*

CAUTION: *FIRST REMOVE ALL SOURCE OF POWER AT THE POINT Of INSTALLATION. INSTALL TEMPORARY GROUND TO THE LINES AT THE POINT OF INSTALLATION. OTHERWISE ELECTRIC SHOCK MAY OCCUR CAUSING SEVERE PERSONAL INJURY.*

INSTALLATION

The TRANQUELL Secondary Surge Arrester is designed to protect an electrical system and equipment from damage due to excessive line surges caused by lightning or other circuit disturbances. The arrester complies with ANSI standard C62.11-1987. It is not a substitute for lightning rods, or other devices intended to protect people and property against a direct or nearby lightning stroke.

The arrester is available in a one-pole, two-pole, or three-pole version, and is suitable for both indoor and outdoor use.

Each arrester is permanently sealed in a LEXAN housing.

Arrester Model	Arrester Rating	No. of Poles	No. of White Ground Leads	No. of Black Line Leads
9L15ECA001	650	1	1	1
9L15ECB001	650	2	1	2
9L15ECC001	650	3	1	3
9L15ECD001	175	2	1	2

The 9L15E series arrester has a maximum continuous operating voltage (MCOV) rating of 650 Volts rms. The permissible line-to-line voltage of the system to which the arrester is applied depends on the circuit configuration, grounding and voltage regulation. Since overvoltages of 10% and greater are common on many systems, the arrester should not be applied at nominal voltages above 480 V. If an arrester is to be applied on higher voltages, e.g. 575 V or 600 V, the user must assure that continuous voltage across the arrester (black-to-white)does not exceed 650 V.

The 9L15FCB001 arrester has a maximum continuous operating voltage (MCOV) rating of 175 Volts rms. Since overvoltages of 10% and greater are common on many systems, the arrester should not be applied at nominal voltages above 120 V.

Typical connections and associated nominal system voltages are shown in Figure 2 for 9L15E series and in Figure 3 for the 9L15FCB001.

These arresters do not require testing, and no test which applies power voltage in excess of maximum arrester voltage rating should be made without consulting the General Electric Company. There is no single field test which will indicate the complete operating characteristics of the arrester.

The arrester may be bracket-mounted (see Figure 1-bracket included with arrester) to a pole, cross arm, wall, panel, or mounted into a connection box having a three quarter of an inch diameter knockout

hole.

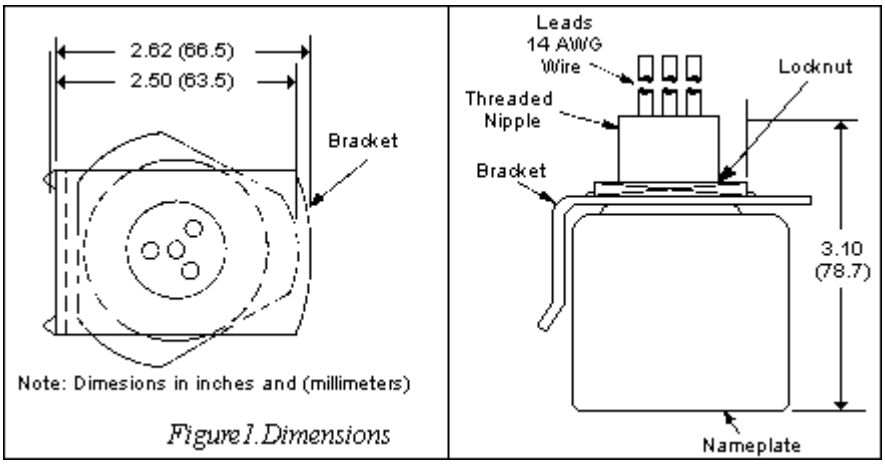

Figure 1. Dimensions

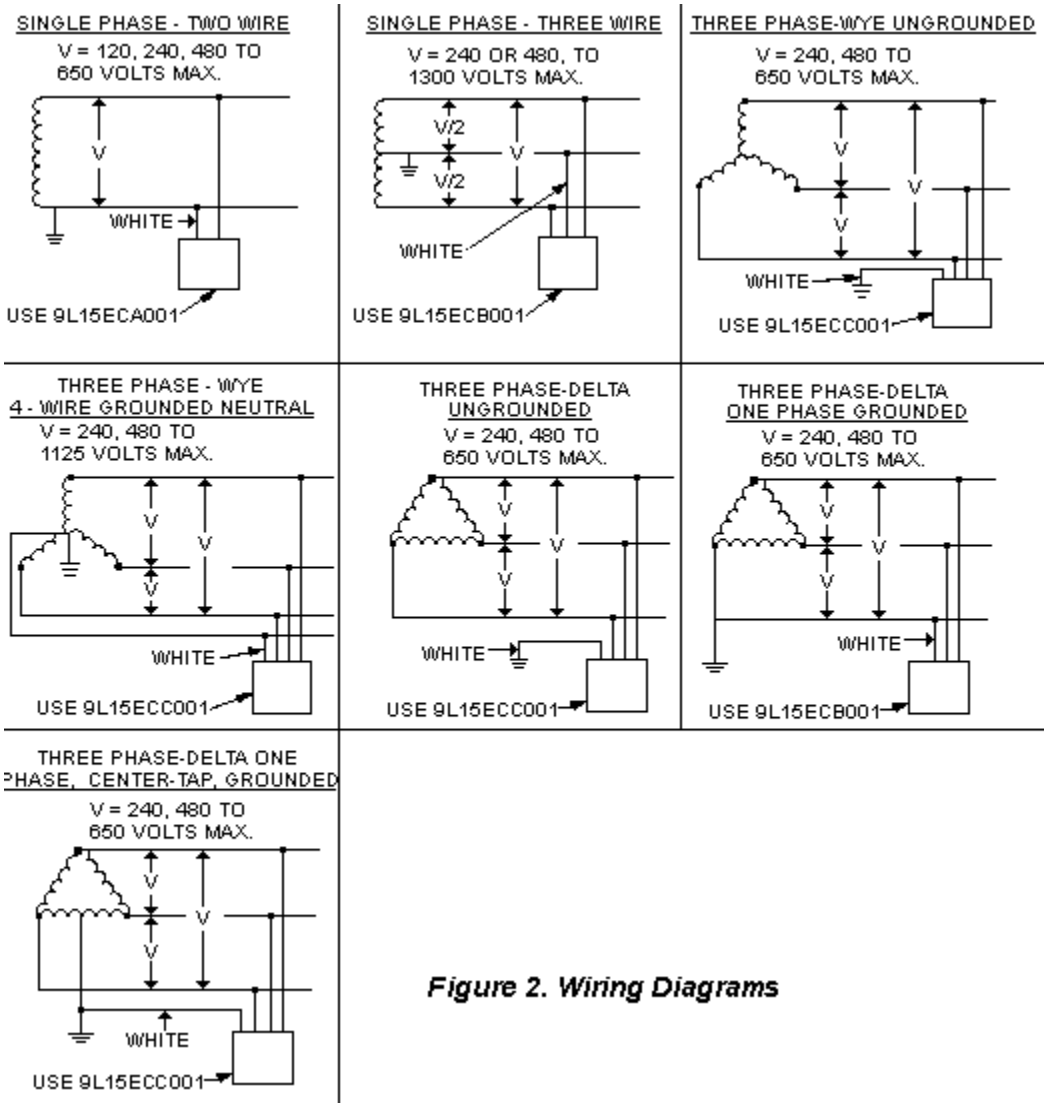

Figure 2. Wiring Diagrams

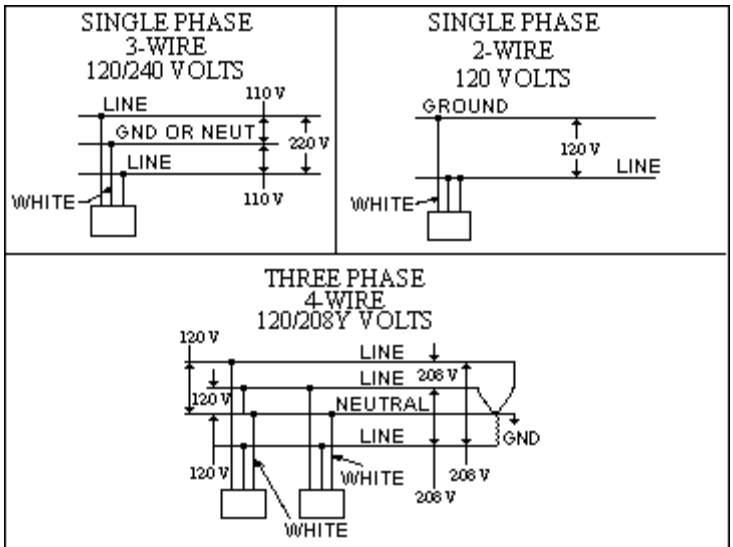

Figure 3. Wiring Diagrams

FUSE SELECTION GUIDELINES

To minimize the possibility of violent rupture in the unlikely event of electrical failure of the arrester, current limiting fuses are recommended for all applications above 120 V. A fuse must be installed in series with each pole of the arrester (i.e. each black wire).

Fault testing has demonstrated that U.L.Class T current limiting fuses of 30 A rating and smaller will minimize risk of rupture. A 60 A fuse did not prevent rupture in all cases but did limit the damage; if 60 A fuses are used the possibility of

rupture should be considered when locating the arrester. Use the smallest fuse that will pass the transient currents expected in service. A list of the current transients tested and the fuses that passed are shown in Table 1.

These fuses are of the non-indication type, so installation of indicating lights or scheduled checks of continuity will be necessary to assure that the arrester has not been disconnected by the fuse as a result of a large surge or in the unlikely event of an arrester failure.

Arrester Location	Maximum Lightning Impulse See Notes (1) & (2)	Fuse Rating See Note (3)
A. Long Branch Circuit more than 20 m from Service Entrance with wires #14-10	200 A	30A; 600 V U.L. Class T 200,000 A Interrupt
B. Major Feeders and Short	3 kA	30A; 600 V

Branch Circuits less than 20 m from Service Entrance	8 x 20 us	U.L. Class T 200,000 A Interrupt
C. Outside Service Entrance	10kA 4x 10 us	60A; 600 V U.L. Class T 200,000 A Interrupt

Notes: (1) Maximum impulse expected as described in ANSI/IEEE C62.41-1980 for systems with Medium Exposure to surges. Arresters have been design tested to impulses as high as 20 kA, 8 x 20 us.

(2) Design Tests for secondary arresters as required by ANSI/IEEE C62.11-1987 are limited to a maximum of 10 kA, 4 x 10 us impulses.

(3) U.L. Class CC (Midget) 30 A fuses are also satisfactory for Locations A & B.